Max. weight on EasyLift = 400 kg
Machine weight = 250 kg

Total weight = 650 kg

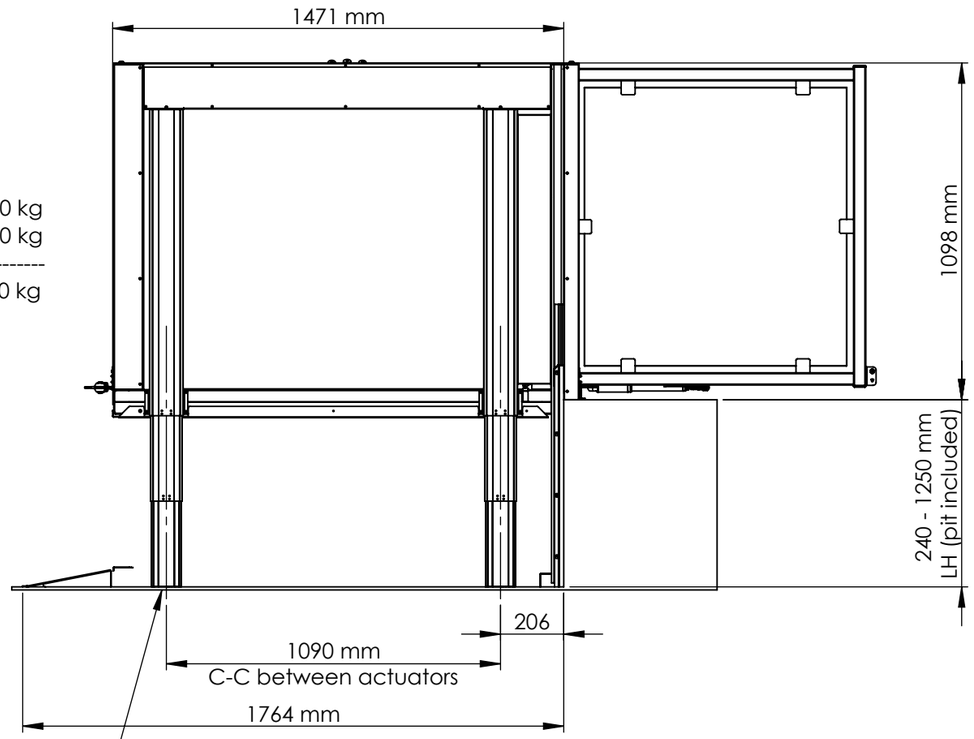

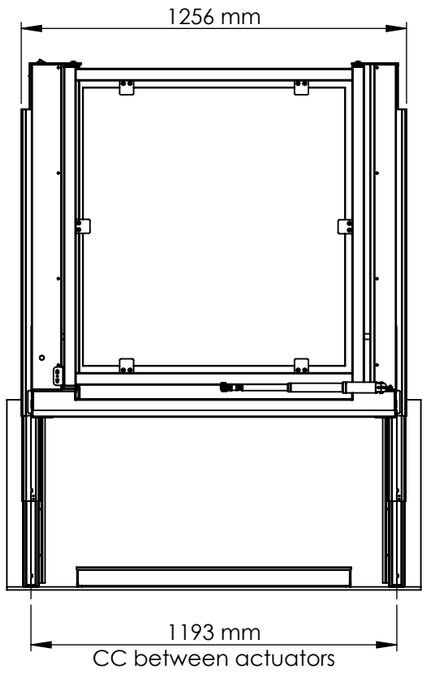

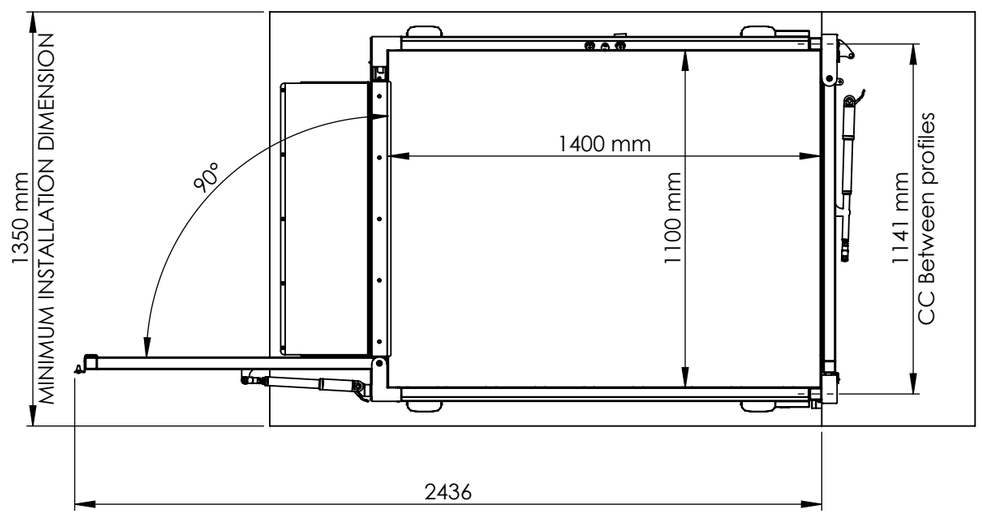

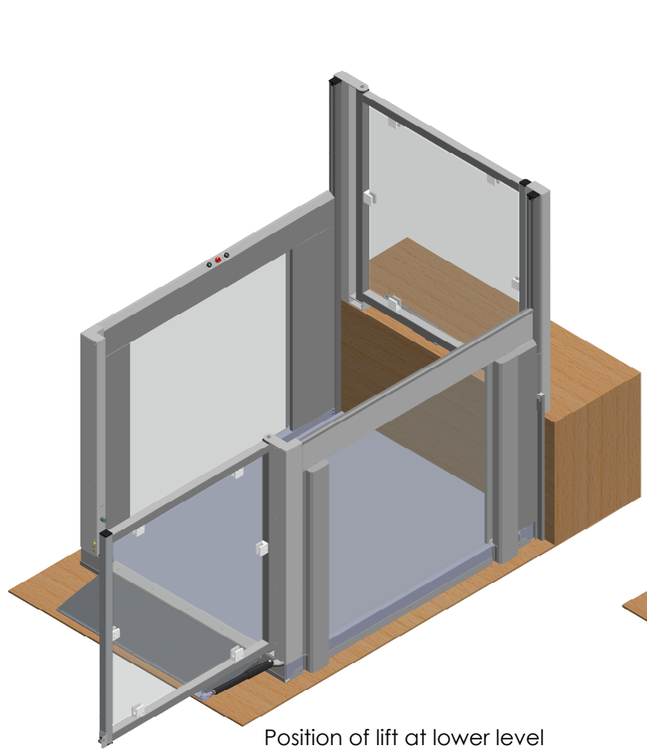

Position of lift at lower level

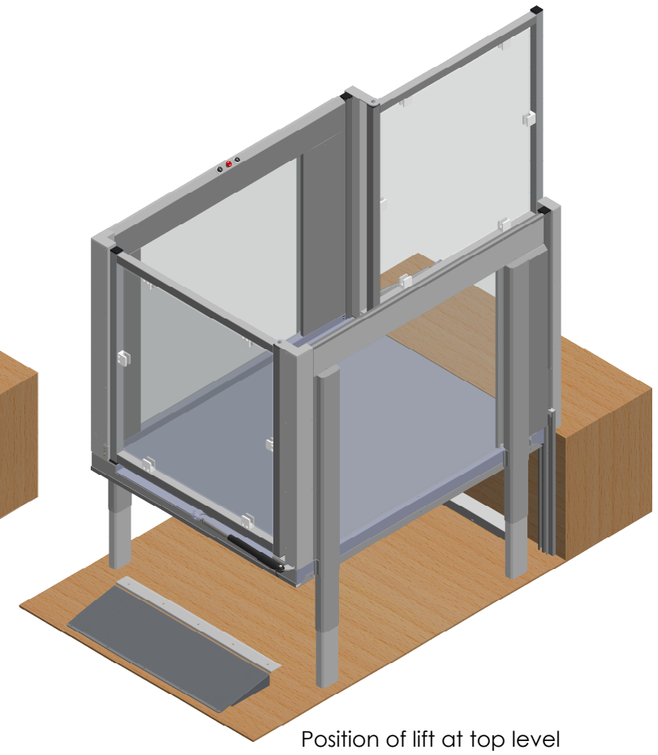

Position of lift at top level

DoorLeft_DoorLeft_NoPit

Rev.	By	☑	Revision description .
G	-		-
F	-		-
B_R E	-		-
D	-		-
K-Factor C	GC		Målsætning ændret
B	GC		Konfigurationer tilføjet

Trident EasyLift 1100 V4

Created date: 20-12-2016
Last change date: 10-03-2017
Materiale: mm Bom
Tolerancer:
Sheet size: A3
Finish: -
Weight:

TRIDENT

Item Number: 103617
Version: C
Scale: 1:20
Drawn by: GC
☑

All Rights reserved Liftup A/S